Innovative design of electrical lubricants test rig for e-grease and e-fluids

Anshuman Dube[1], Narendra M. Dube[1], Debdutt Patro[1], Deepak H. Veeregowda[2]*

[1]Global Applications Lab, Ducom Instruments, India
[2]Global Applications Lab, Ducom Instruments, B. V. Netherlands

A new generation of component test rigs relevant to battery powered electric vehicles (EV's) have become essential for lubricants industry that is spending almost all the R&D cost into creating value in EV's market space. In this presentation, we will present our innovative product design of Electrical Lubricants Test Rig (see Figure 1) with a two stage lubricated bearings that can be tested up to 30,000 rpm and at load up to 15 kN. Bearings can be lubricated with grease or oils, that can be heated up to 150 °C using our proprietary heat exchanger. Rotor dynamics and cooling system are key techniques to reduce its downtime and improve safety of the operator. We will elaborate on these techniques during the presentation. Each bearing station is embedded with smart sensors that captures the vibration, noise, bearing friction and temperature of the lubricated system. The sensor system is MOOHA enabled that completely automates the process of data collection, cloud storage, analytics, and reporting, collectively they provide insight to e-grease or e-fluid performance i.e. antiwear, thermal conductivity, friction and fatigue resistance. We will share a case study that describes the performance of few electrical lubricants widely used in electric motor and electric wheel hubs of battery powered EV's. Electrical Lubricants Test Rig is the first in market that is aimed at creating high value lubricants for better performance of EV's and empower the idea of reducing carbon emission through electrification.

Keywords: Electric vehicles, e-grease, e-fluid, friction, high speed

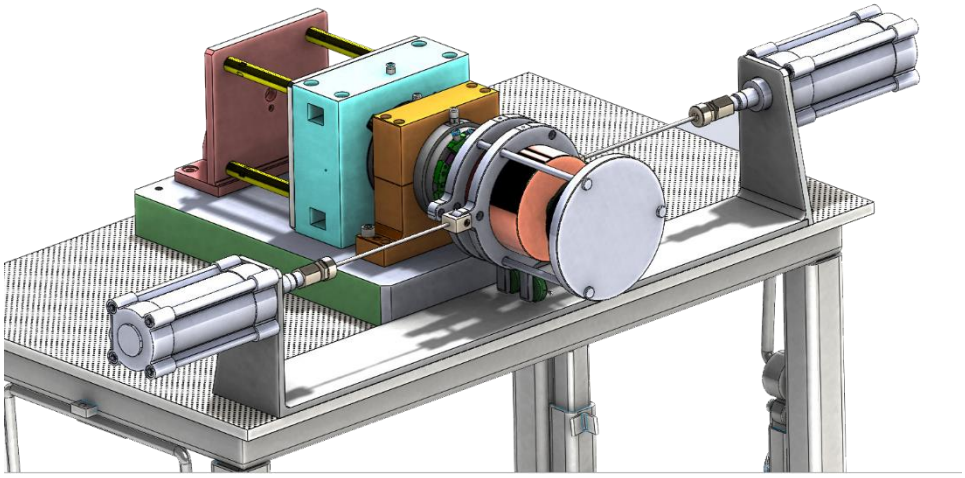

Figure 1. Ducom Electrical Lubricants Test Rig

*Corresponding author: Deepak.v@ducom.com